Name:_____

Exam Question Booklets
OCR Physics A

Booklet 3
14 Questions
112 marks

Things to remember:

✓

✓

✓

✓

✓

✓

✓

1

A child sits on a swing and is pulled by a horizontal force **P** so that the chains make an angle with the vertical of 35°. Fig. 2.1 shows the forces acting in this position.

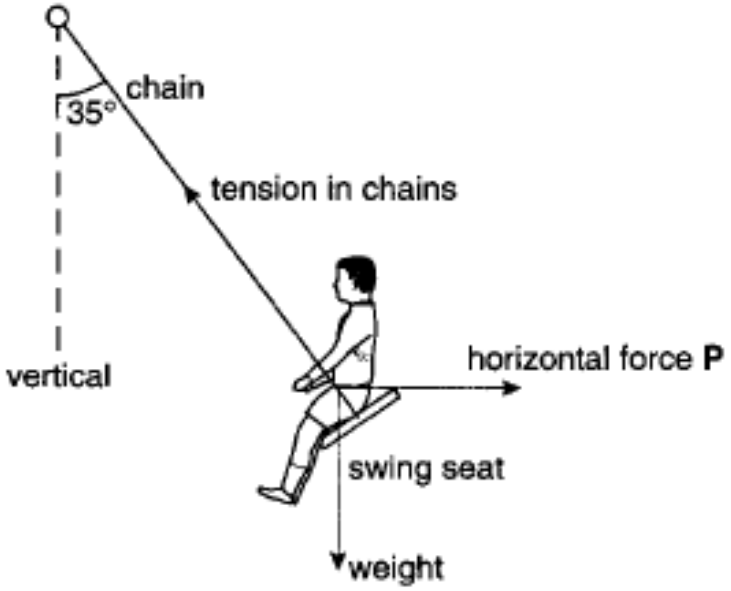

Fig. 2.1

The combined mass of the child and swing seat is 28 kg.

(a) Calculate the combined weight of the child and swing seat.

weight = ... N [2]

(b) Use a **labelled** vector triangle to determine the force **P** required to hold the swing stationary in the position shown in Fig. 2.1.

force = ... N [4]

(c) State and explain what happens to the tension in the chains if the swing is pulled so that the chains make a larger angle with the vertical. A numerical answer is not required.

.....

.....

.....

..... [2]

Fig. 1 shows a helicopter that has a cable hanging from it to the sea below.

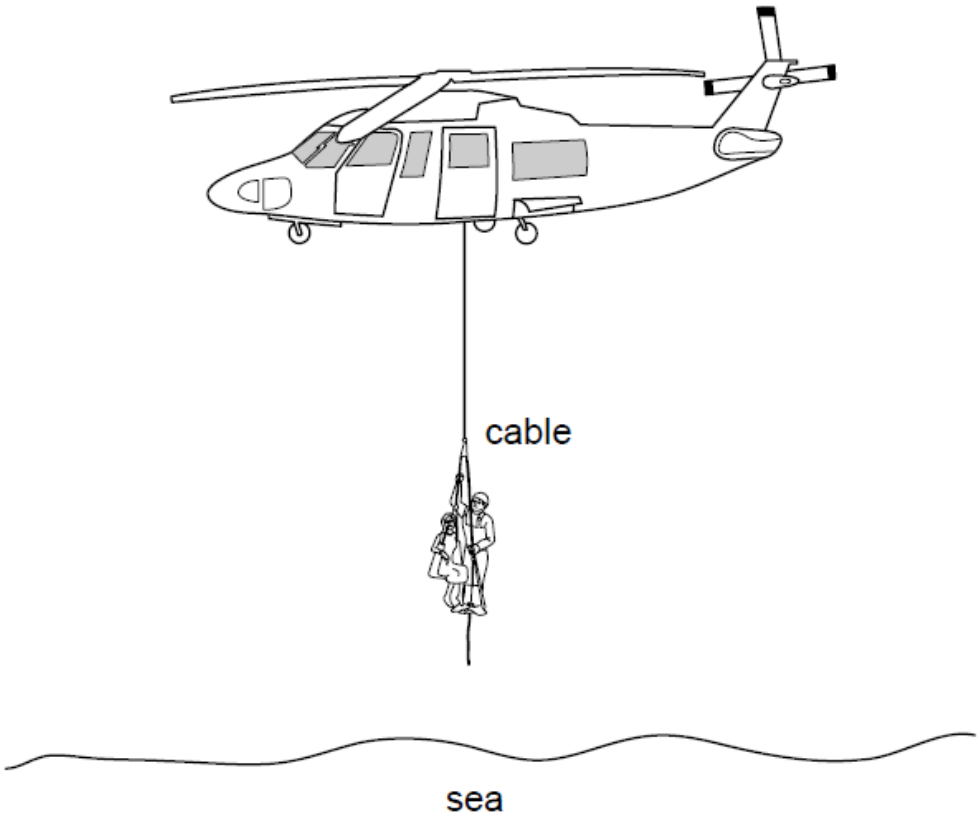

Fig. 1

A girl of mass 55 kg is rescued by a man of mass 75 kg. The two are attached to the cable and are lifted from the sea to the helicopter. The lifting process consists of an initial acceleration followed by a period of constant velocity and completed by a final deceleration.

(a) Name the two main forces acting on the two people being lifted.

.....

.....

[2]

(b) Calculate the combined weight of the man and girl.

weight = ... N

[1]

(c) Calculate the tension in the cable during

(i) the initial acceleration of 0.55 m s^{-2}

tension = ... N

[2]

(ii) the period of constant velocity.

tension = ... N

[2]

(d) Calculate the final deceleration if the tension in the cable is 1240 N.

deceleration = ... m s^{-2}

[2]

(e) Sketch on Fig. 2 a graph of velocity v against time t for the complete lifting process.
Numerical values are not required.

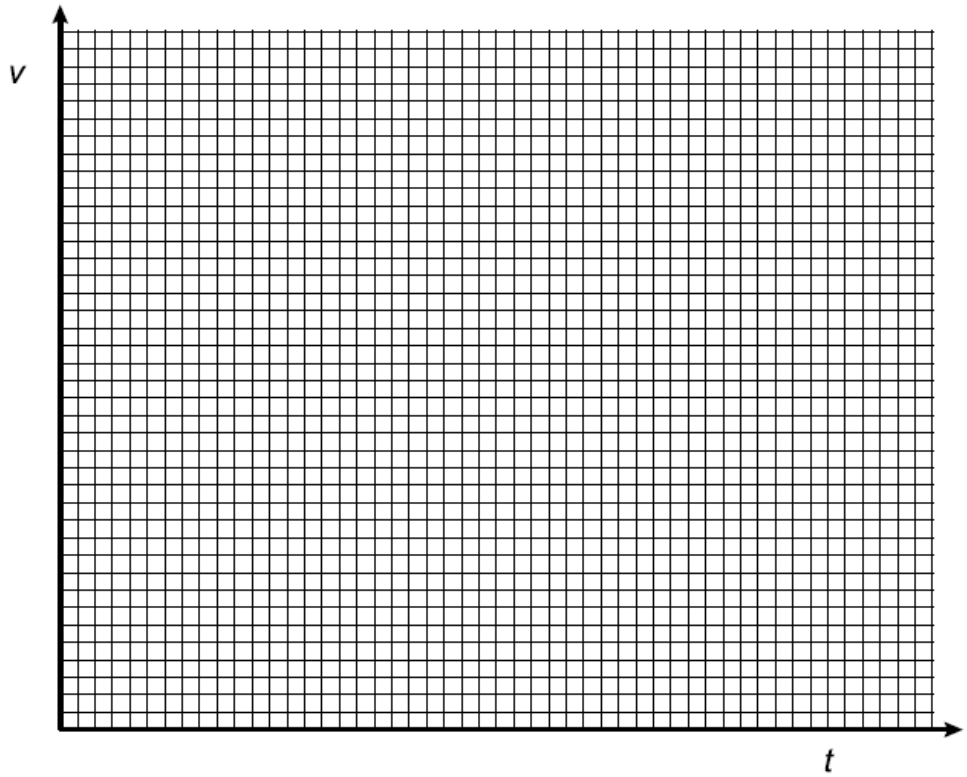

Fig. 2

[3]

3

Define a *newton*.

.....

.....

.....[1]

Define centre of gravity.

.....

.....[2]

(a) Define density.

.....

.....[1]

(b) A paving slab has a mass of 45 kg and dimensions 50 mm × 600 mm × 600 mm.

(i) Calculate the density of the material from which it is made.

density ..... unit ..... [2]

(ii) Calculate the maximum pressure the slab could exert on the ground when resting on one of its surfaces.

maximum pressure ..... Pa [4]

(iii) Twelve slabs, identical to that described in **(b)**, are to be stored on soft ground. Discuss whether less damage would be caused to the ground if the slabs were stored next to each other on their smallest surface or in one pile on their largest surface. (You will be awarded marks for the quality of written communication in this part of the question.)

.....

.....

.....

.....

.....

.....[3]

5

(a) **(i)** Define *pressure*.

.....

.....

.....

(ii) State the SI unit of pressure.

.....

[3]

(b) Fig. 4.1 shows the arrangement of the master cylinder and the slave cylinder for part of a braking system. The master cylinder piston, of surface area 8.0 cm^2, exerts a force of 28 N on the brake fluid when the driver presses the brake pedal.

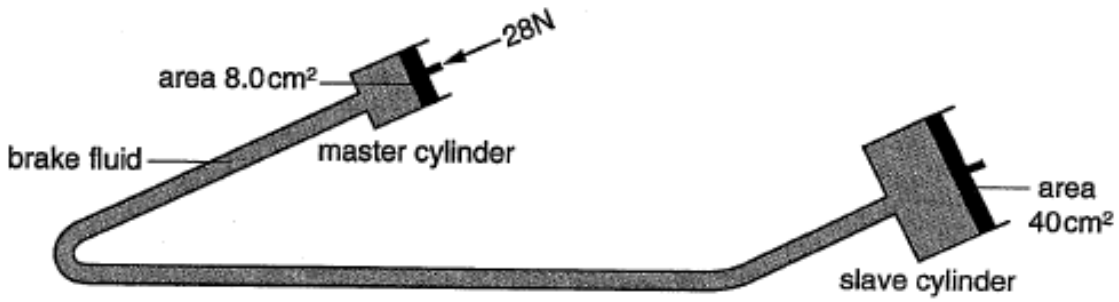

Fig. 4.1

(i) Calculate the pressure on the brake fluid produced by the master piston.

pressure = ... unit ..... [2]

This pressure is transmitted to the slave cylinder piston that has a surface area of 40 cm^2.

(ii) Calculate the force exerted on this piston.

force = ... N [2]

(iii) State **two** methods of increasing the force produced by the slave cylinder piston.

.....

.....

..... [2]

6 This question is about skydiving.

(a) A skydiver falls from a stationary balloon high above the surface of the Earth.
Air resistance can be neglected at this height since the density of the air is low.

Show that the time taken for the falling skydiver to accelerate to the speed of sound after leaving the balloon is more than 30 s.

speed of sound = 330 m s^{-1}
acceleration due to gravity = 9.8 m s^{-2}

[3]

(b) As the skydiver descends towards the Earth the density of the air increases.

Fig. 10.1 shows how the velocity of the skydiver changes with time as he falls towards Earth, before opening his parachute.

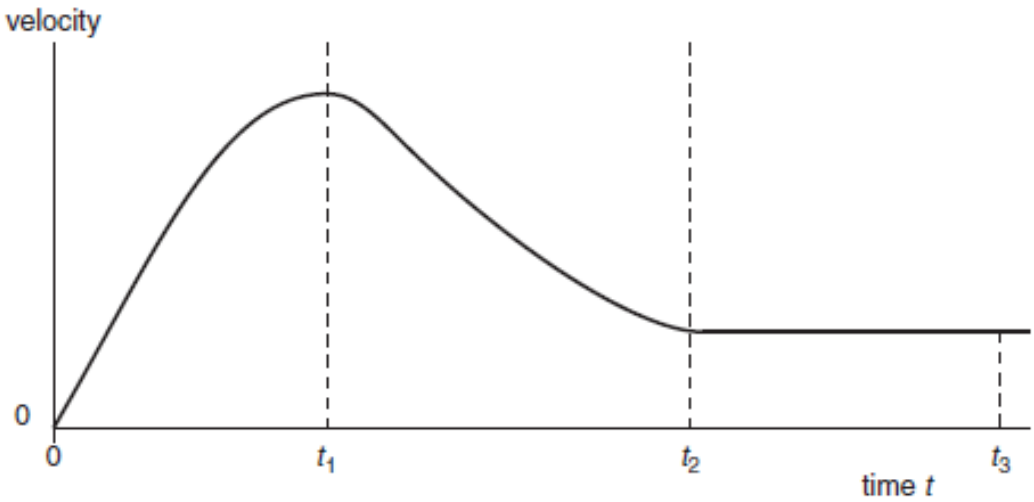

Fig. 10.1

(i) Complete the following statements.

1 The area under a velocity-time graph represents

.....

2 The gradient of a velocity-time graph at any time represents

..... [2]

(ii) The graph shows three distinct stages of the skydiver's descent.

Using information from the graph, describe the motion of the skydiver in each of the time intervals shown on the graph.

$t = 0$ to $t = t_1$

$t = t_1$ to $t = t_2$

$t = t_2$ to $t = t_3$

[3]

7

(i) State the *principle of moments*.

.....

.....

..... **[1]**

(ii) State the **two** conditions for a system to be in equilibrium.

.....

.....

.....

..... **[2]**

8 Fig. 4.1 shows a stationary oil drum floating in water.

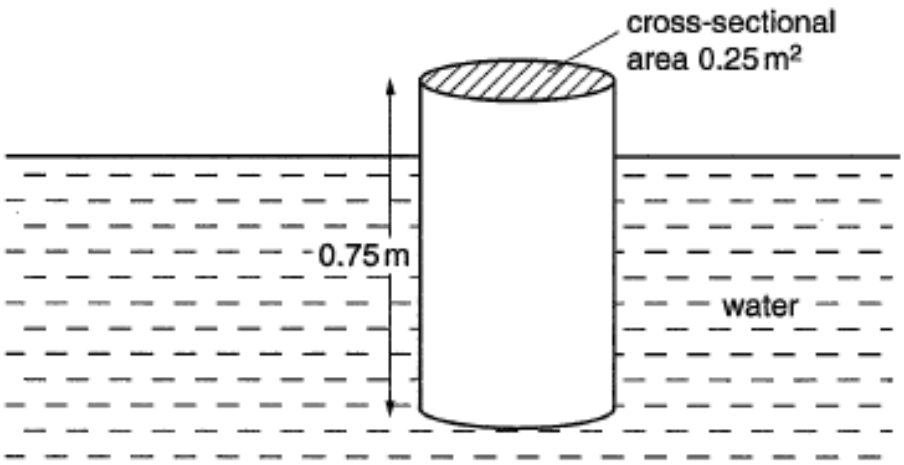

Fig. 4.1

The oil drum is 0.75 m long and has a cross-sectional area of 0.25 m^2. The air pressure above the oil drum is 1.0×10^5 Pa.

(a) Calculate the force acting on the top surface of the oil drum due to the external air pressure.

force = ... N [2]

(b) The average density of the oil drum and contents is 800 $kg\,m^{-3}$. Calculate the total weight of the oil drum and contents.

weight = ... N [3]

(c) Calculate the force acting upwards on the base of the drum.

force = ... N [1]

9 In this question, you are to choose how to measure the acceleration of a trolley moving down an inclined runway.

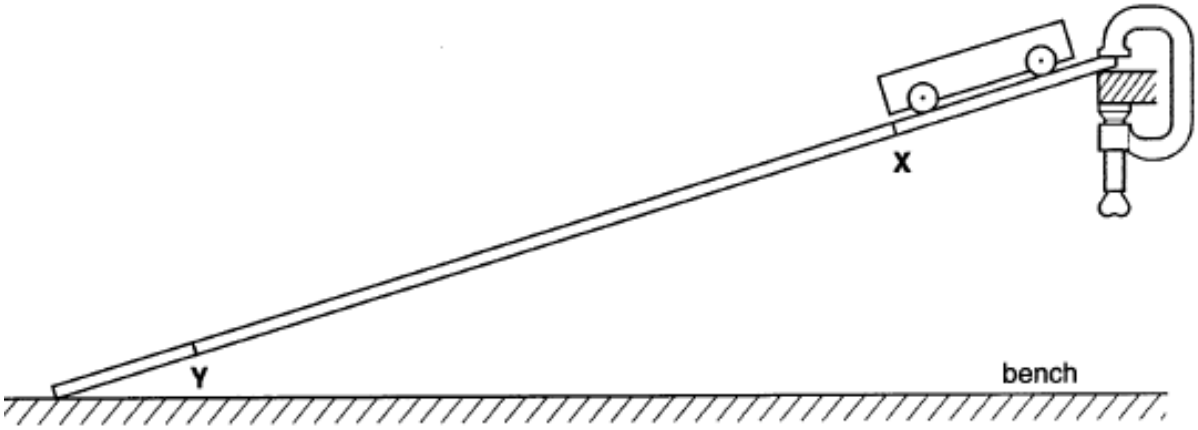

Fig. 12.1

An inclined runway is set up on a bench. One end of the runway is firmly supported above the bench in the position shown in Fig. 12.1.
The trolley is released from point **X** and accelerates uniformly down the runway to point **Y**.

(a) State the quantities that would need to be measured to find the acceleration of the trolley.

[2]

(b) **(i)** Describe and explain how you would make the measurements. You may add to Fig. 12.1 if you wish.

[4]

(ii) Show how the quantities would be used to find a value for the acceleration.

[3]

(c) **(i)** Suggest **two** different factors that might limit the accuracy of the measurement of the acceleration.

1.

2.

[2]

(ii) Suggest and explain **one** way the accuracy might be improved.

[2]

(a) Fig. 3.1 shows a device used for compressing materials.

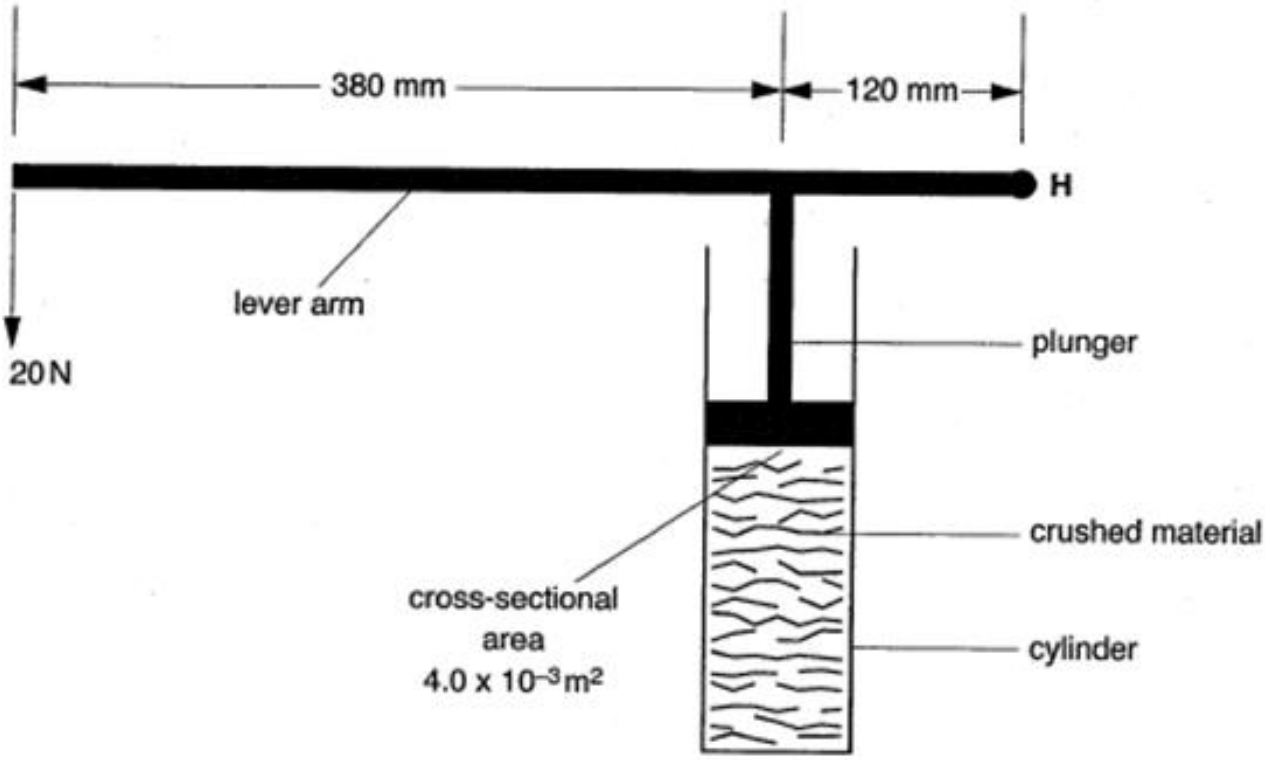

Fig. 3.1

A vertical force ***F*** of 20 N is applied at one end of a lever system. The lever is pivoted about a hinge **H**. The plunger compresses the material in the cylinder.

(i) Two forces acting on the lever arm are its weight and the force ***F***. On Fig. 3.1, draw and label **two** other forces acting on the lever arm. [2]

(ii) By taking moments about **H**, show that the force acting on the plunger is 83 N. The weight of the lever arm may be neglected.

(b) **(i)** The cross-sectional area of the plunger is $4.0 \times 10^{-3}\,m^2$. Calculate the pressure exerted by the plunger on the material in the cylinder.

pressure = ... Pa [2]

(ii) State **two** methods of increasing the pressure exerted by the plunger.

.....

.....

.....

.....

.....[2]

11

(a) Define

(i) the *moment* of a force

.....

.....[2]

(ii) the *torque* of a couple.

.....

.....[1]

(b) Fig. 4.1 shows a uniform rectangular beam supported by two straps. The beam is in equilibrium.

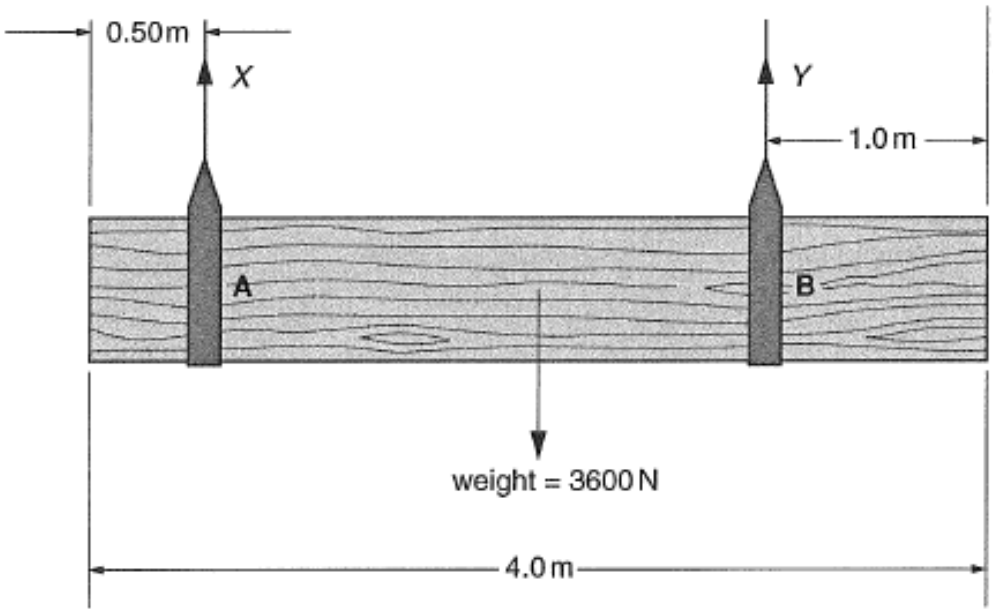

Fig. 4.1

The weight of the beam is 3600 N and its length is 4.0 m. The strap **A** is positioned 0.50 m from one end of the beam and the strap **B** is positioned 1.0 m from the other end.

(i) **1** Use the principle of moments to show that the upward force *X* at strap **A** is 1440 N.

[2]

2 Hence determine the force Y at the strap **B**.

force = ... N [2]

(ii) Discuss whether the forces X and Y provide a couple.

.....

.....

.....

.....[2]

(iii) The area of strap **A** in contact with the underside of the beam is $2.3 \times 10^{-2}\,m^2$.
Calculate the average pressure exerted on the beam by strap **A**.

pressure = ... unit ..... [3]

12 Fig. 2.1 shows a gannet hovering above a water surface.

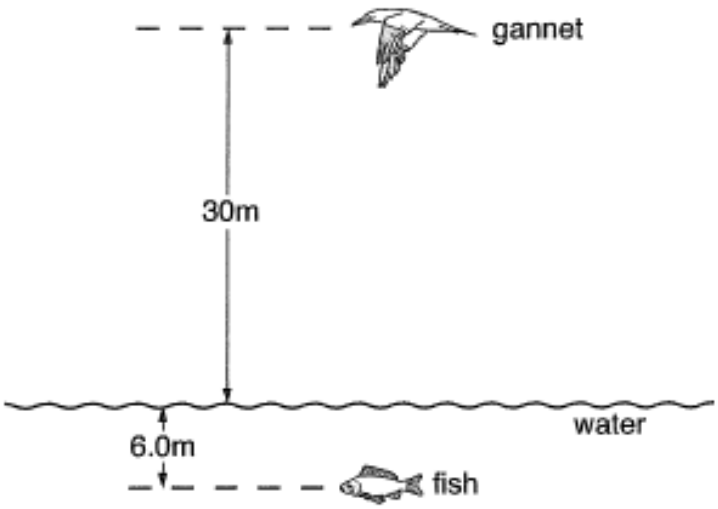

Fig. 2.1

The gannet is 30 m above the water. It folds in its wings and falls vertically in order to catch a fish that is 6.0 m below the surface.

Ignore air resistance.

(a) Calculate

(i) the speed that the bird enters the water

speed = ... $m\,s^{-1}$ [2]

(ii) the time taken for the bird to fall to the water surface.

time = ...s [2]

(b) The bird does not continue to travel at the acceleration of free fall when it enters the water. State and explain the effect of the forces acting on the bird as it falls

(i) through the air

.....

.....

.....

.....[2]

(ii) through the water.

.....

.....

.....

.....[2]

13 Fig. 2.1 shows a skier during a speed skiing competition. Speed skiing is skiing downhill in a straight line as fast as possible.

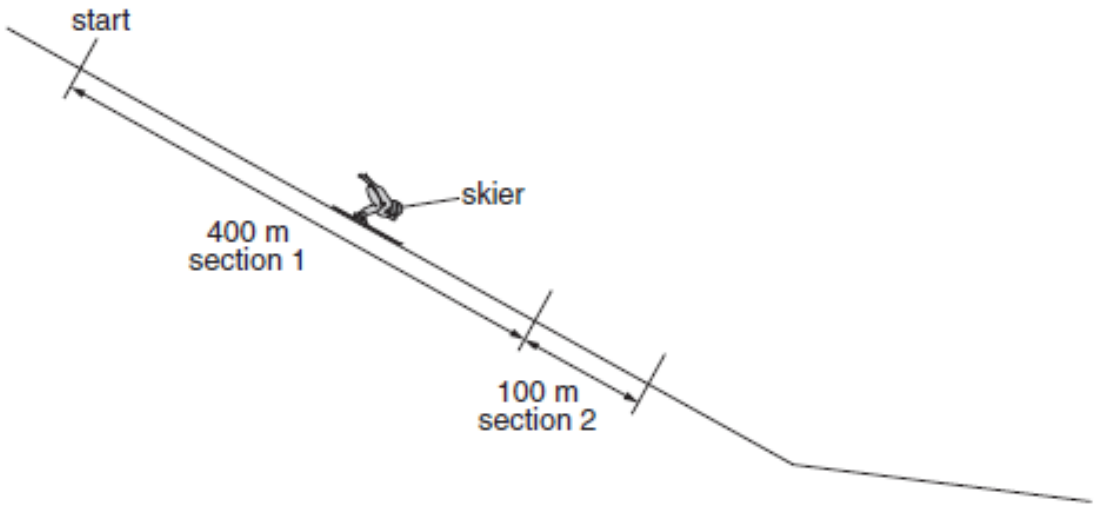

Fig. 2.1

In section 1 the skier started from rest and travelled at constant acceleration of $3.90\,m\,s^{-2}$ for a distance of 400 m. Section 2 is 100 m long and this is where the skier is timed for the competition. The time recorded was 1.82 s.

(a) Calculate

(i) the time taken for section 1

time = ... s **[2]**

(ii) the speed of the skier at the end of section 1

speed = ... $m\,s^{-1}$ **[1]**

(iii) the average speed for section 2.

average speed = ... $m\,s^{-1}$ **[1]**

(b) Explain two methods the skier could adopt to increase the average speed for section 2.

.....

.....

.....

.....

..... **[2]**

(a) Fig. 4.1 shows a car of mass 1200 kg, pulling a caravan of mass 400 kg along a horizontal road.

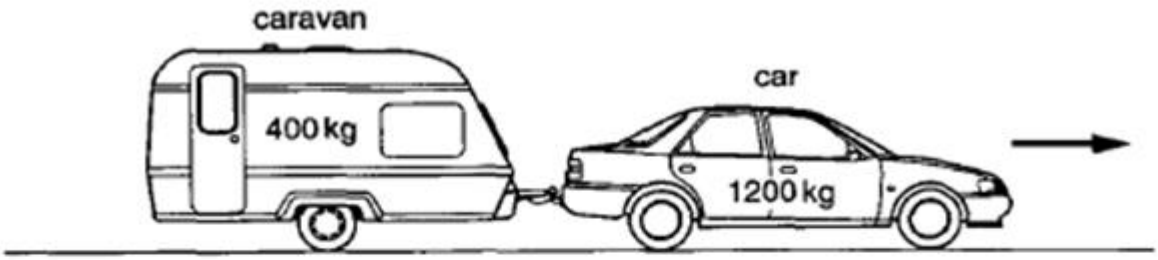

Fig. 4.1

Fig. 4.2 shows the variation with time *t* of the velocity *v* of the car as it accelerates from rest.

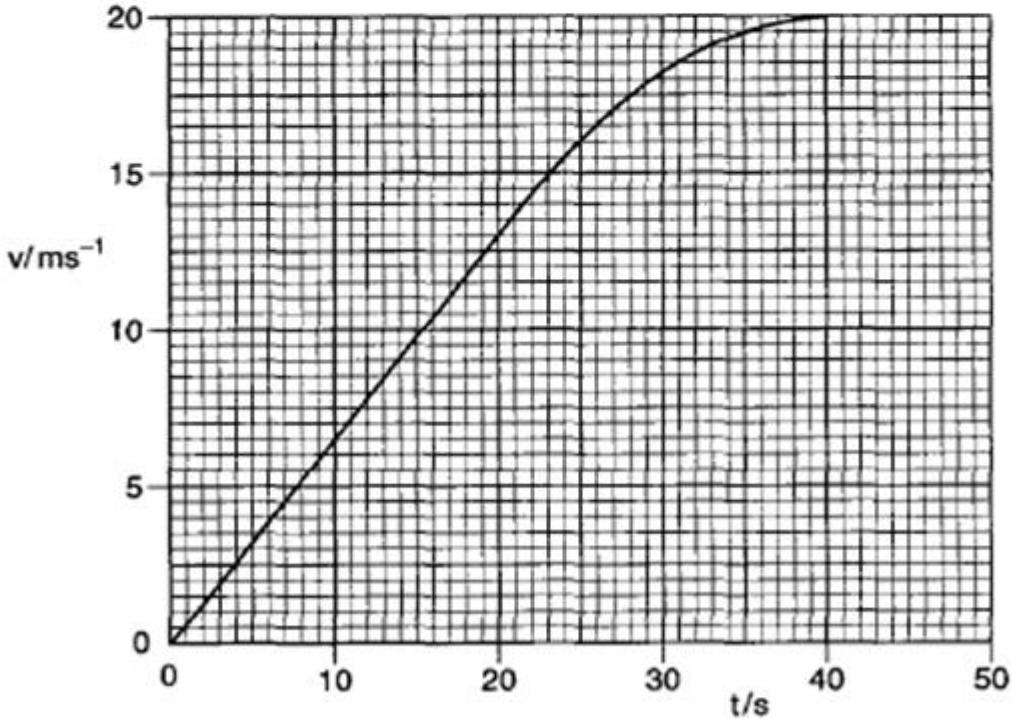

Fig. 4.2

Calculate, for the first 20 s of the journey

(i) the acceleration of the car

acceleration = ... $m\,s^{-2}$ [2]

(ii) the resultant force acting on the car

resultant force on the car = ... N [2]

(iii) the resultant force acting on the caravan.

resultant force on the caravan = ... N [2]

(b) **(i)** Use the graph in Fig. 4.2 to describe how the acceleration changes **after** the first 20 s of the journey.

.....

.....[1]

(ii) Suggest a possible reason for this change.

.....

.....[1]